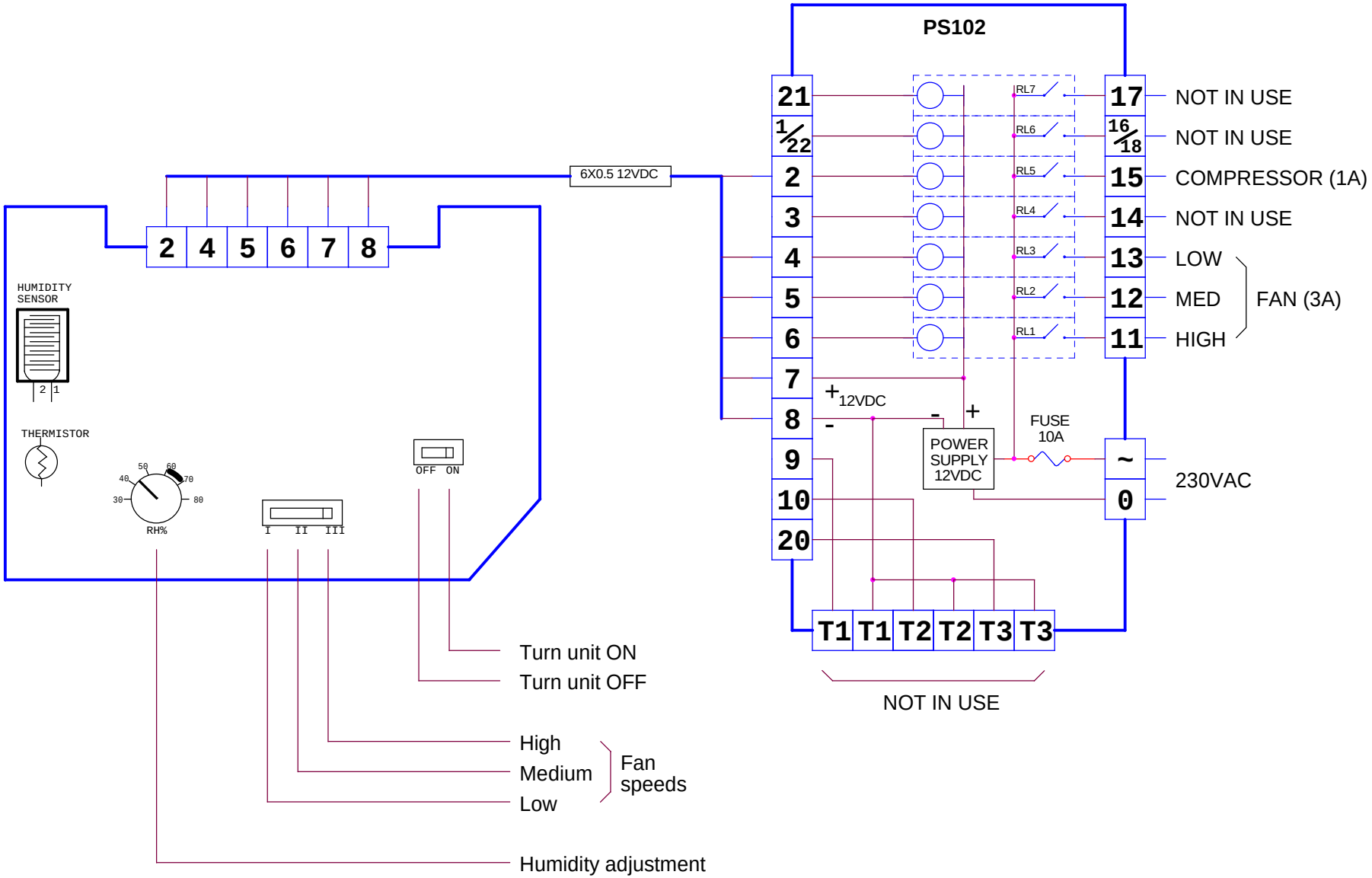

meitav-tec Tel: +972-3-9626462 Fax: +972-3-9626620 email: support@meitavtec.com	Title: ERHU55 (PS102) Date: 15/06/2008 DWG No. ------			Print name: erhu-55	Drawn: M.Ruchansky
				Software name: erhu55	Checked: A.Star
		1	Original	15/06/08	Check sum: eodo	Approved: E.Roy
		No.	Revision	Date	File name: ERHU55+PS102(EUROPE).DSN